Foglia art. 411 C

Foglia art. 411 R

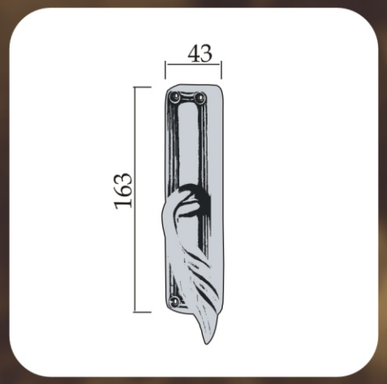

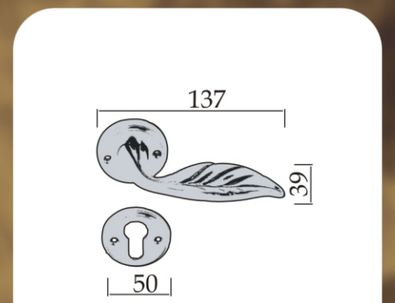

Finiture - *Finishes*

Oro Lucido
Polished Brass

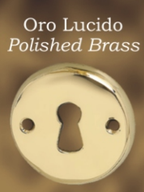

Placcato Oro 24 K
24 K Gold Plated

Oro Antico
Antique Brass

Bronzo Satinato Opaco
Satinated Bronze Matt

Argento Antico
Antique Silver

Rame Antico
Antique Copper